DIAMANT-KERNBOHRMASCHINE TYP DK 118

DIAMOND-CORE DRILL TYPE DK 118

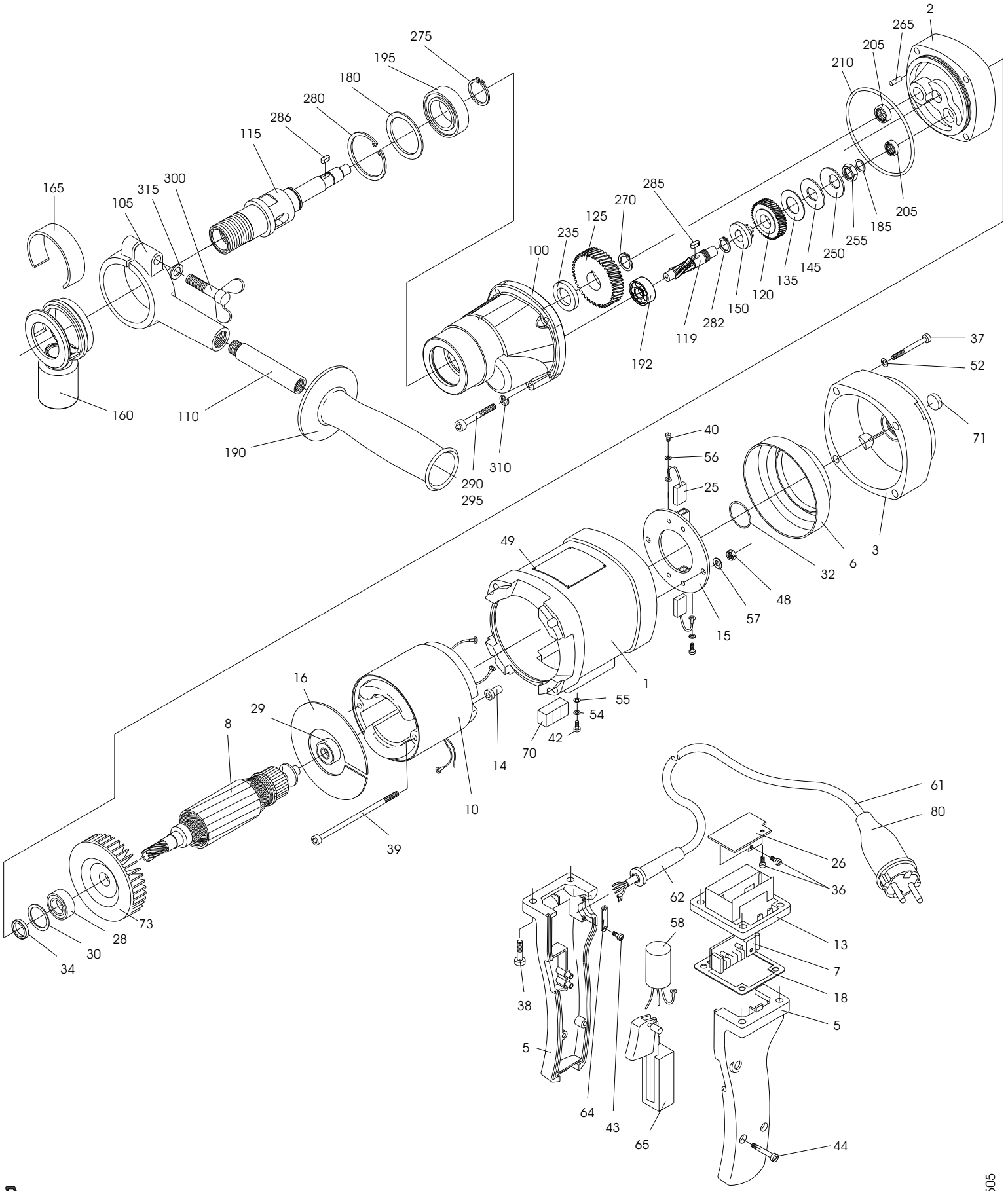

020505